Drawing for approval | 359_04_2012

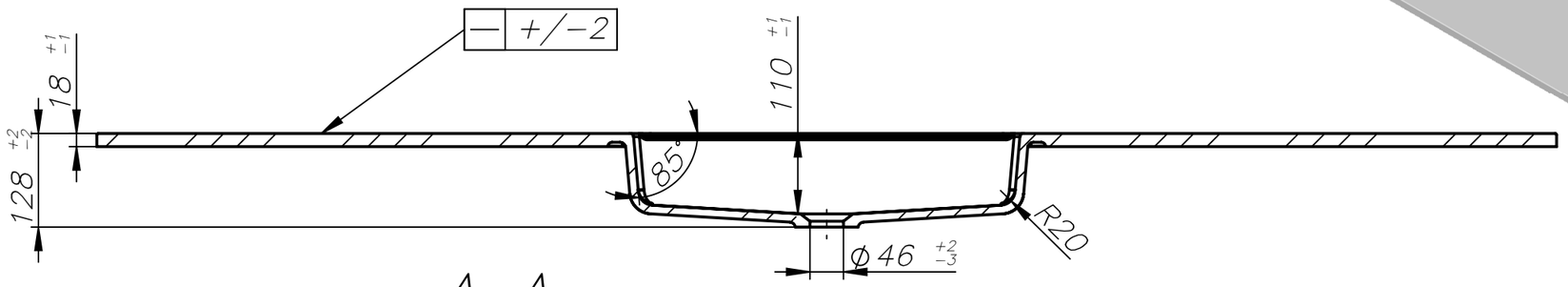

A−A

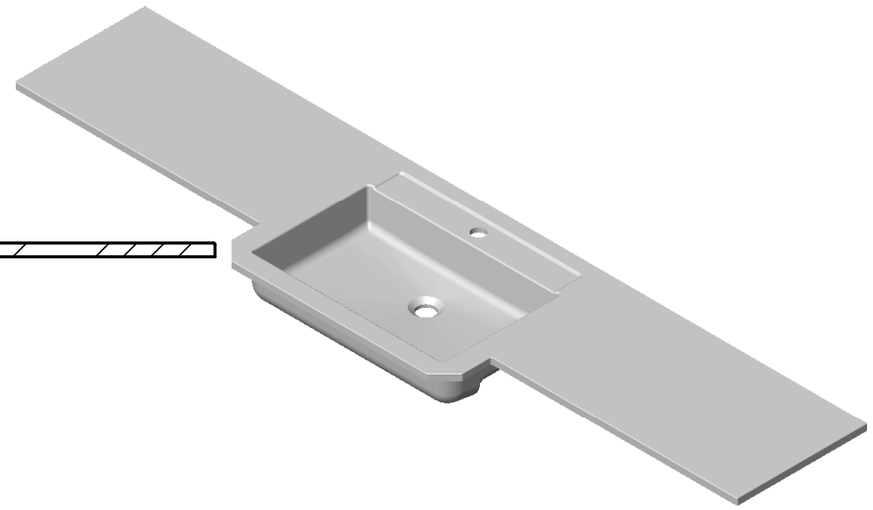

B−B

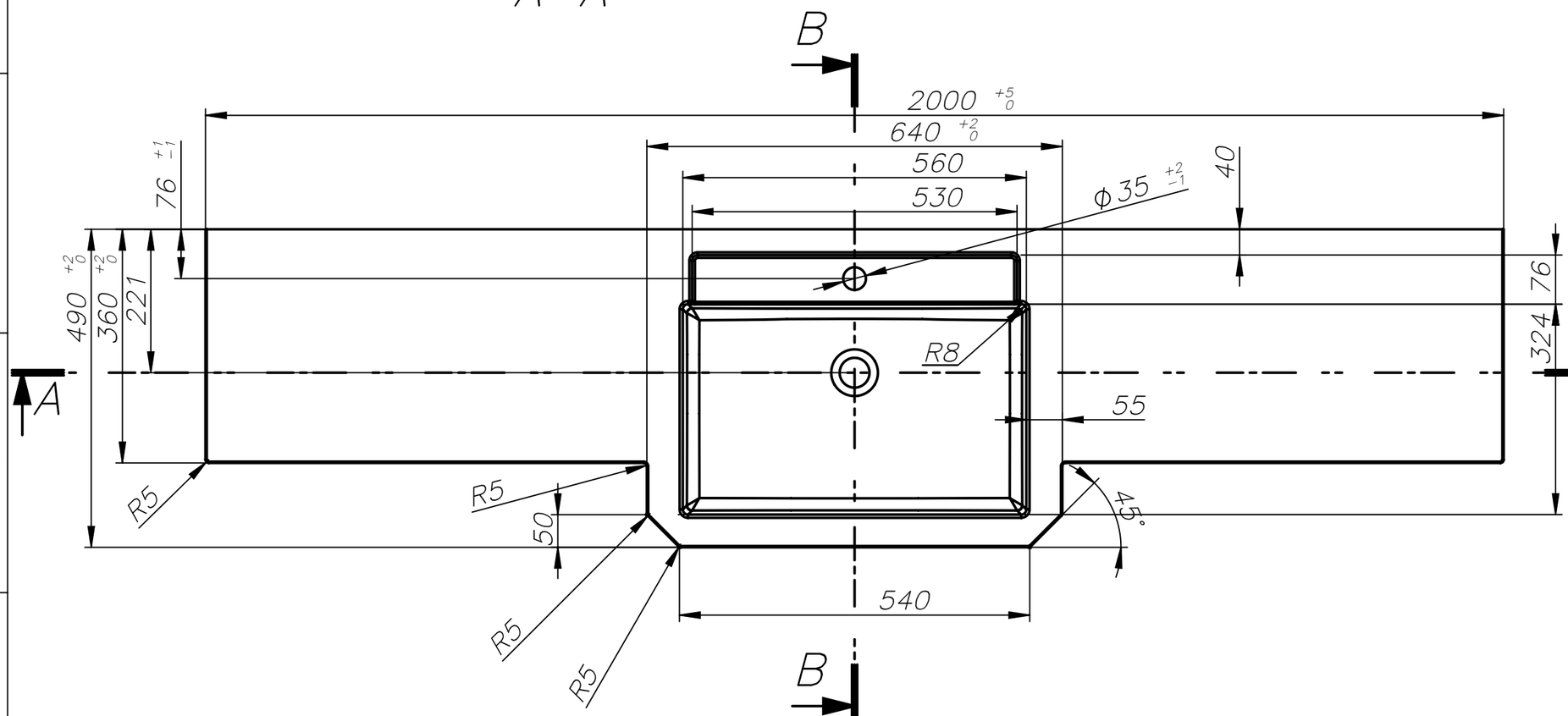

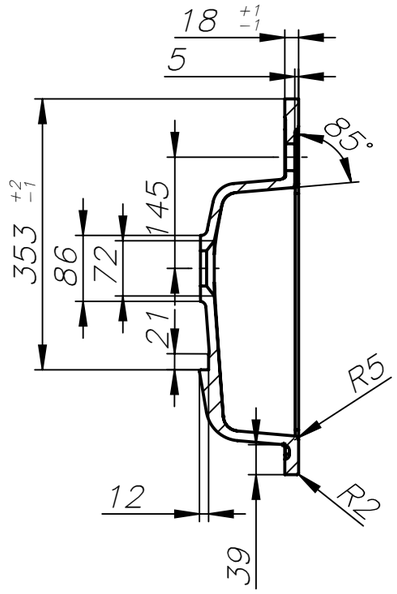

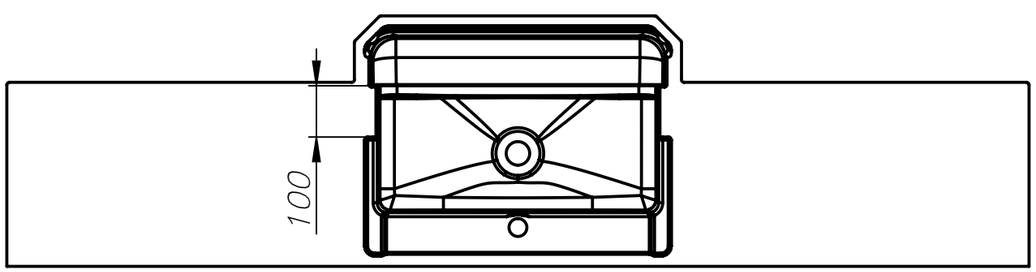

The margin of error in case the regulation is +2-0 measured from the axis of the basin.
Die Fehlergrenze in Fall der Regulierung beträgt +2-0 von Achse der Becken.

According to project: Badea			Material:	Localization: \\Marm−symf\cnc\Projekty\Badea\Taya\single regulowana\	
	Date	Name	Signature	Name of drawing: Taya single variable	A3
It constructed	21.06.2013	Andrucewicz A.			
It has checked	01.01.2013	Przydróżny/Gała			
It has approved					
Scale	marmorin			Dimension gabarit	Version