Drawing for approval 288_2012

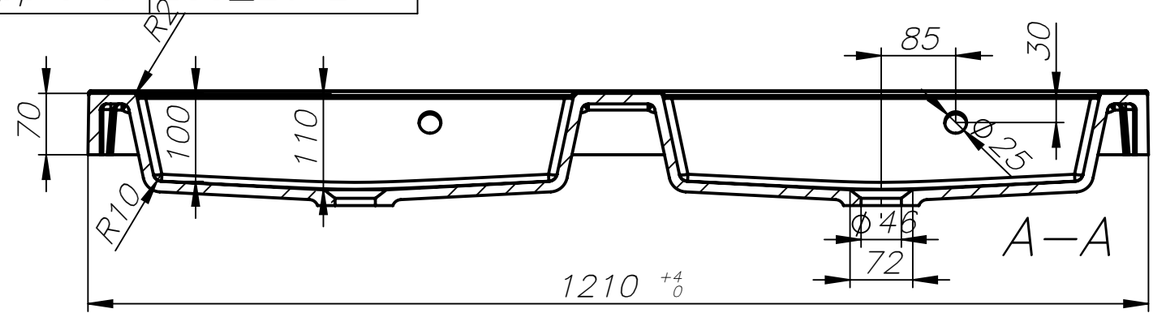

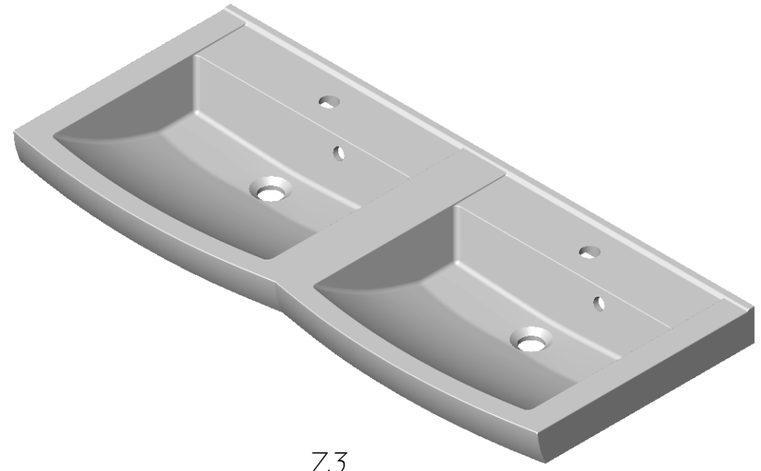

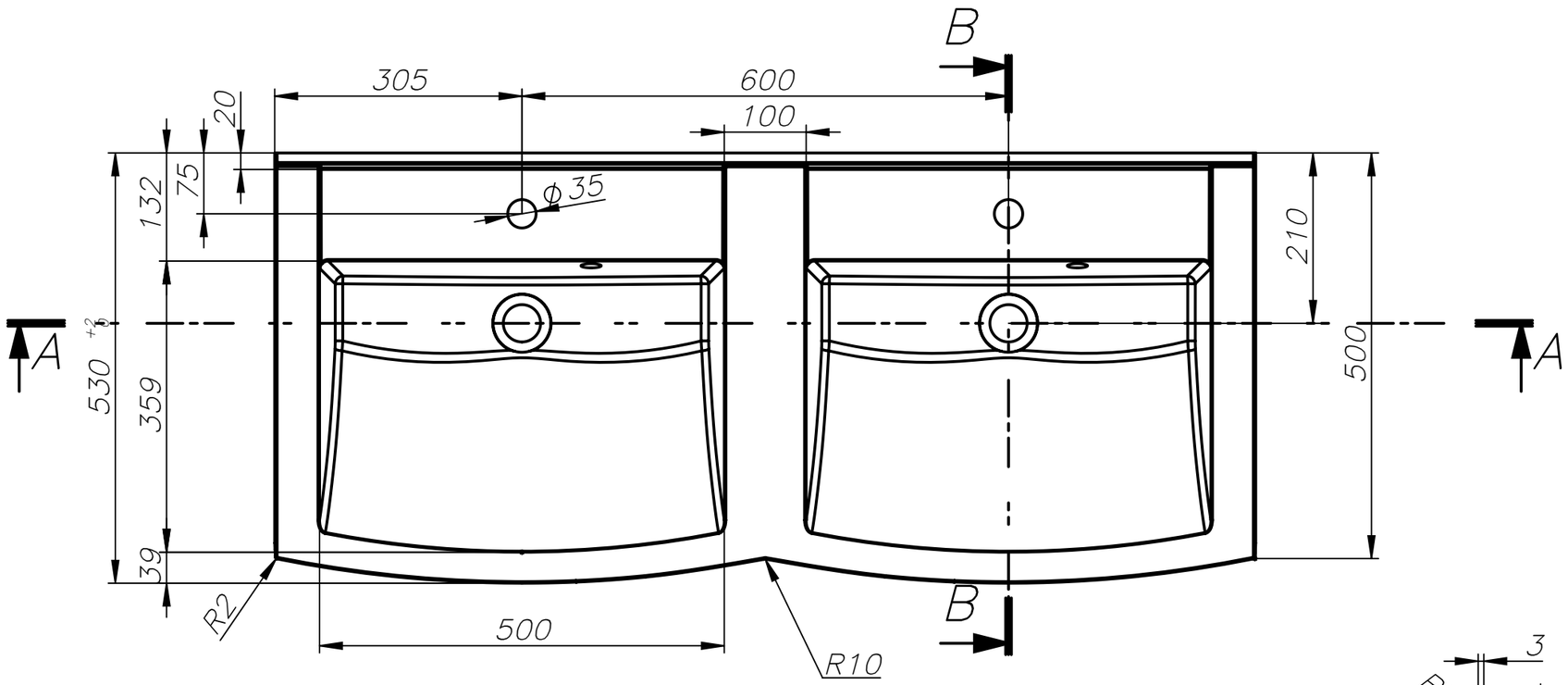

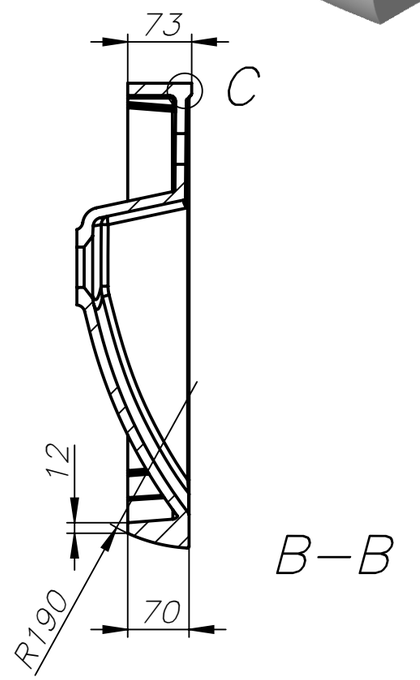

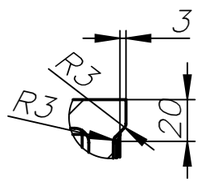

SZCZEGÓŁ C
1 : 3

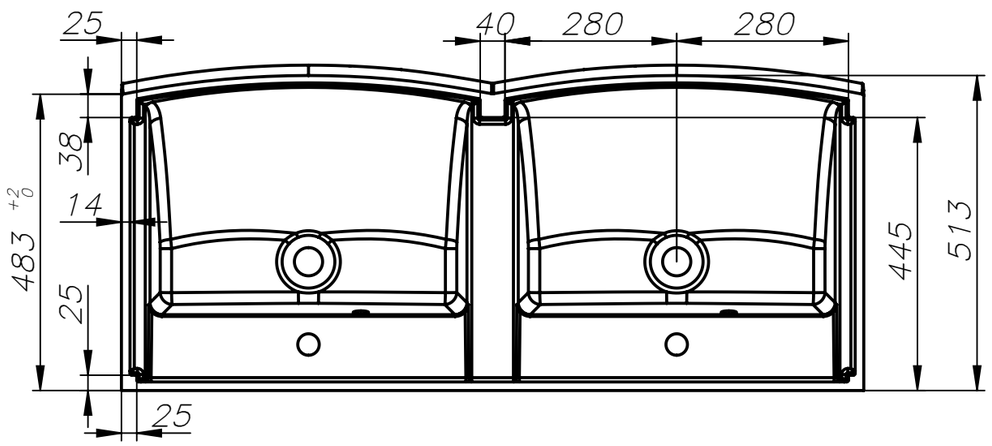

According to project	Badea		Material	Localization D:\Andrzej Projekty\Badea\Futura\1210 D\	
	Date	Name	Signature	Name of drawing Futura 1210 D	A3
It constructed	28.08.2012	Andrucewicz A.			
It has checked					
It has approved					
Scale	marmorin			Dimension gabarit	Version