Drawing for approval | 359_2012/426_4_2013

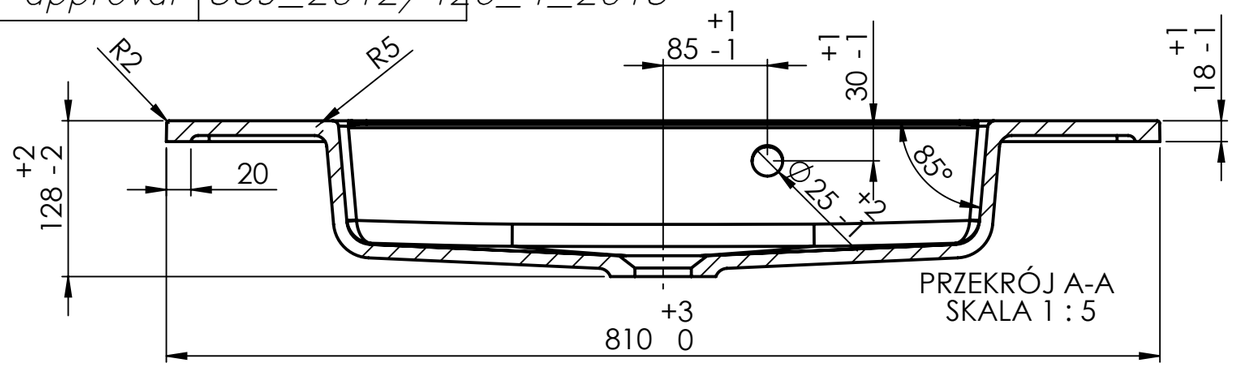

PRZEKRÓJ A-A
SKALA 1 : 5

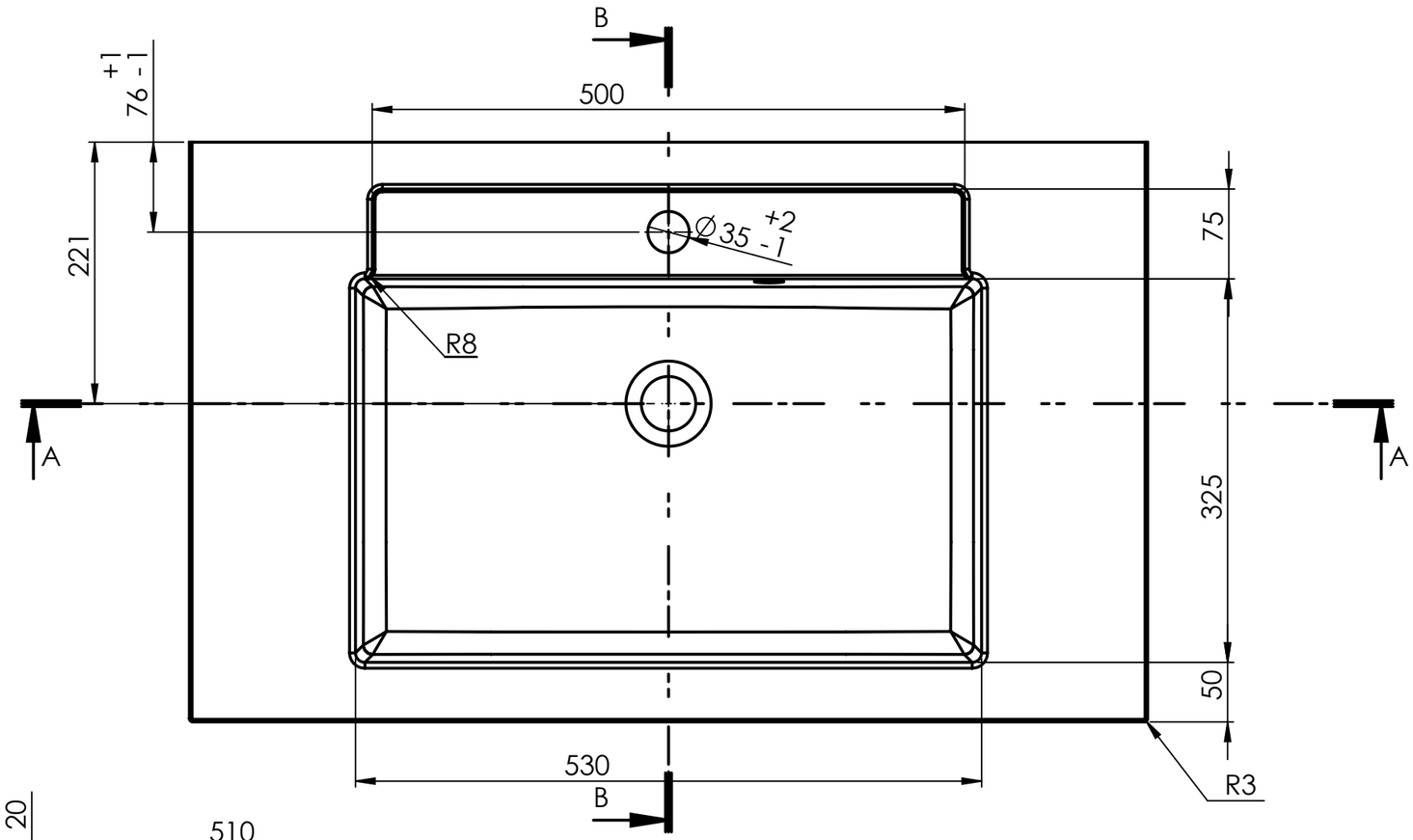

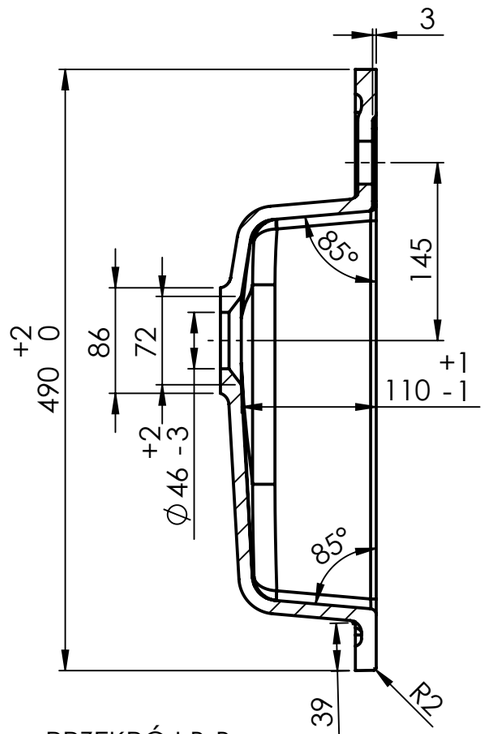

PRZEKRÓJ B-B
SKALA 1 : 5

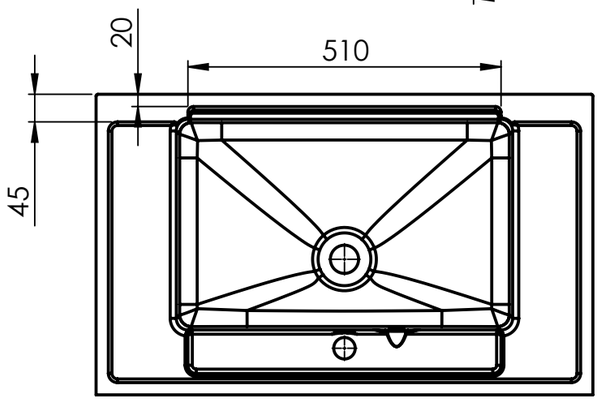

According to project	Badea		Material	Localization \\Marm-symf\cnc\Projekty\Badea\Forum\	
	Date	Name	Signature	Name of drawing	
It constructed	21.06.2013	Andrucewicz A.		Forum 810	A3
It has checked					
It has approved					
Scale	marmorin			Dimension gabarit 810x490	Version