Drawing for approval | 421_02_2013

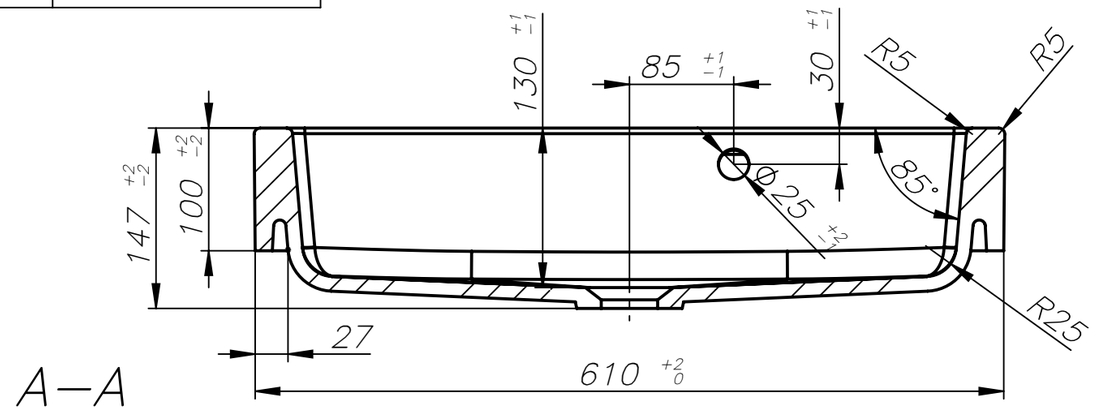

A–A

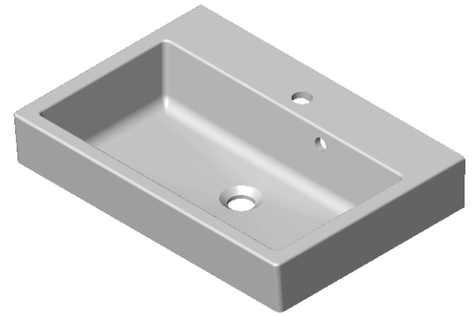

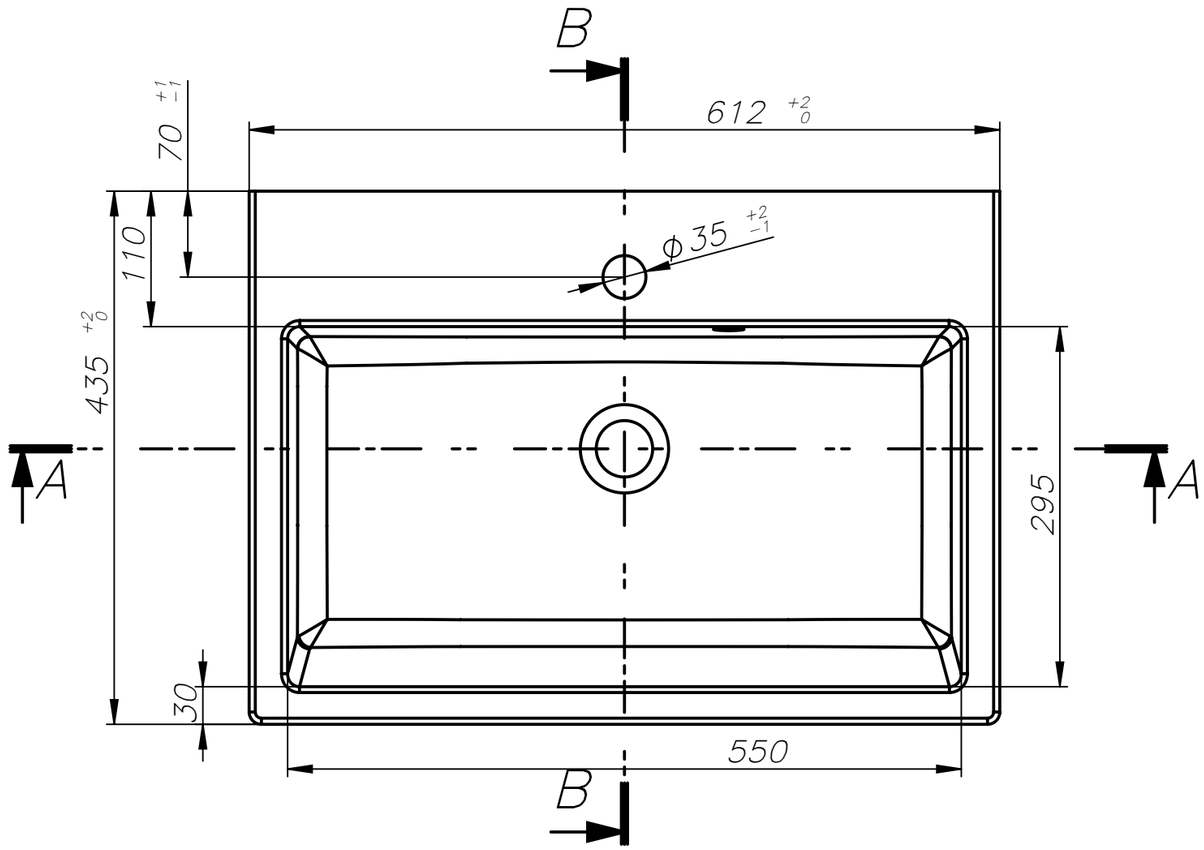

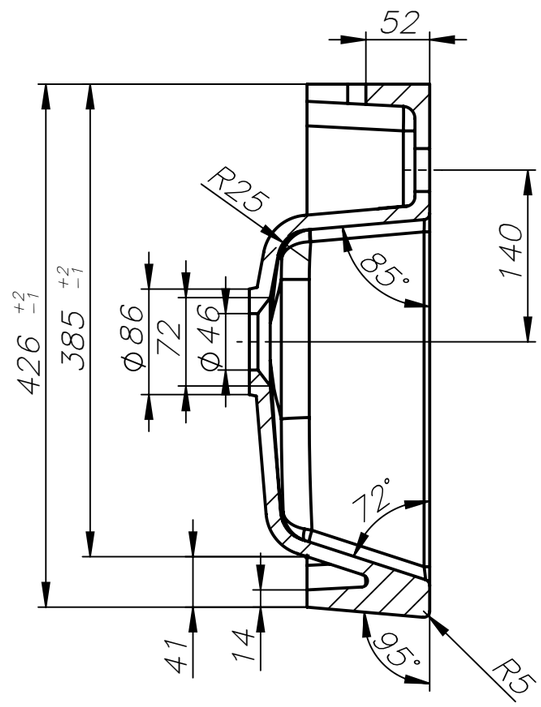

B–B

According to project	Badea		Material	dolomit	Localization \\Marm–symf\cnc\Projekty\Badea\Faro\	
	Date	Name	Signature	Name of drawing		
It constructed	09.05.2013	Andrucewicz A.		Faro 610		A3
It has checked	09.05.2013	Smakulski				
It has approved						
Scale	marmorin			Dimension gabarit		Version